

BRUSHED BRASS FRAME / BRONZE TINTED MIRROR



BRUSHED BRASS / BRONZE MIRROR / MISTY BLUE INTERIOR



FLUTED TOUGHENED GLASS / BLACK FRAME



OLIVE FRAME / GREY TINTED & ANTIQUE MIRROR FINELINE

Premium aluminium sliding wardrobe doors.

Combining sculpted aluminium profiles with an extensive choice of glass, mirror, solid colour and woodgrain finishes, Maxima offers exceptional design flexibility. Create a bespoke wardrobe that complements your interior and reflects your individual style.

MAXIMA FRAME FINISHES



Silver | Stone Grey | Graphite | Black | White | Cashmere | Olive | Brushed Brass

INSTALLATION CROSS-SECTION

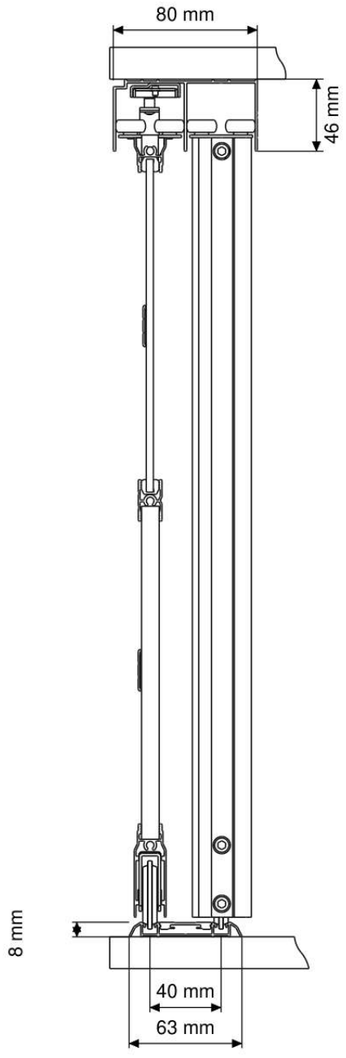

80 mm top track / 63 mm bottom track

EXPLODED DOOR ASSEMBLY

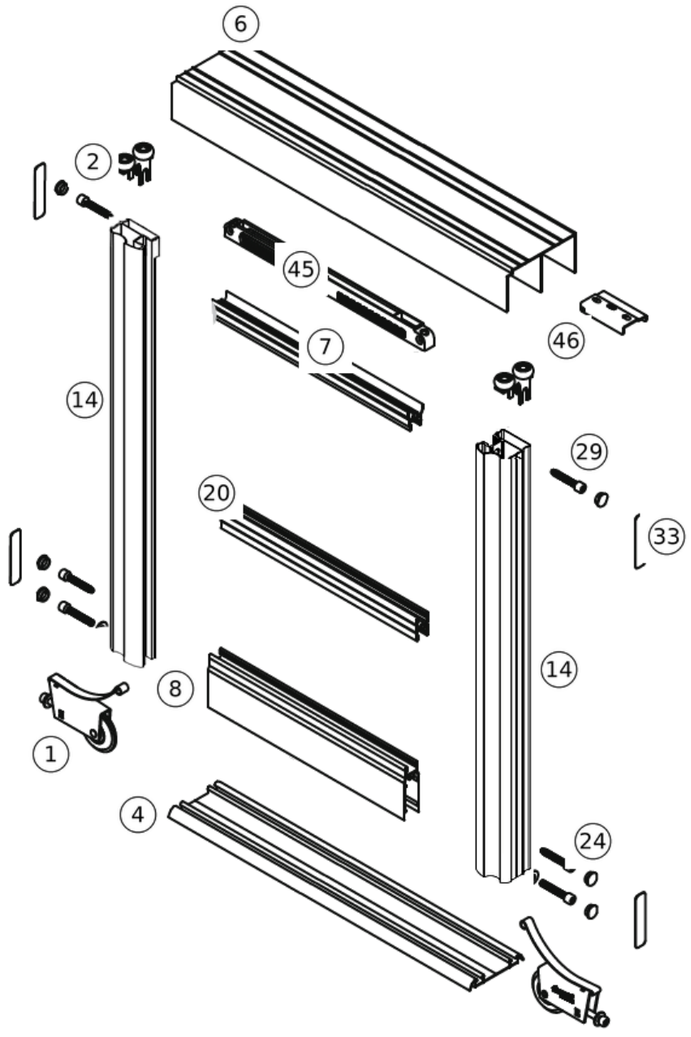

Legacy soft-close hardware shown provisionally.

COMPONENT DETAILS

(14) Maxima vertical frame



Extruded Aluminium Profile, either anodised or powder coated finish

(1) Bottom roller



Height adjustable, sprung anti-jump system, precision ball bearings. Steel housing, nylon tyre.

(2) Top guide



Twin wheeled top guide – precision ball bearings

(7) Top rail



Upper horizontal door frame, extruded aluminium

(8) Bottom rail

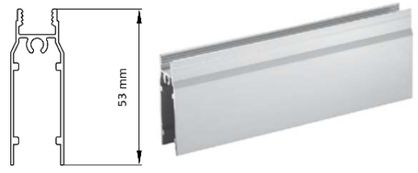

Lower horizontal door frame, extruded aluminium

(45)(46) Soft close



High quality soft close (1 per door), contact us if you require 2 per door

OPTIONAL COMPONENTS & TRACK CONFIGURATIONS

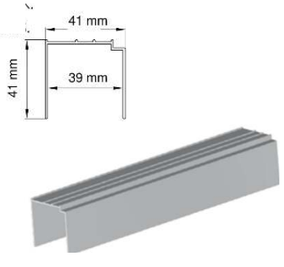

Single top track

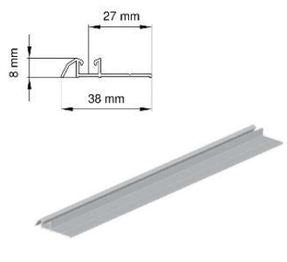

Single bottom track

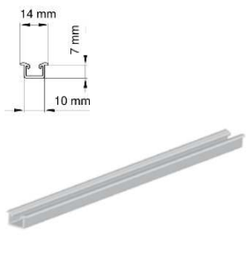

Recessed single track

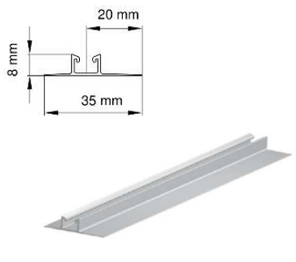

Wide recessed track



Door locator



Buffer strip



Dust-stop brush



Buffer strip clip

Legacy assembly soft-close illustrations shown provisionally; fixing cap or plug (24/33) pending confirmation.

GLISS| Material finishes & door designs

MIRROR & SATIN MIRROR


Silver Mirror (B)


Grey Mirror (D)


Bronze Mirror (D)


Satin Silver (F)


Satin Grey (F)


Satin Bronze (F)

ANTIQUE MIRROR


Nimbus (E)


Cumulus (E)


Alto (E)


Stratus (E)


Cirrus Satin (F)

PAINTED & SATIN PAINTED GLASS

Painted glass (E), satin painted glass (F). Misty Blue: painted only.


Pure White


Chalk Grey


Cashmere


Pebble


Stone Grey


Storm Grey


Blush


Rusty Red


Reed Green


Misty Blue

SOLID COLOURS

ST9 | Price group A


Premium White


Light Grey


Cashmere


Antique Rose


Rusty Red


Sage Green


Reed Green


Agave Green


Pebble Grey


Stone Grey


Dust Grey


Misty Blue


Cubanit Grey

SPECIALIST GLASS

Exclusive to GLISS Maxima


Clear Fluted (F**)


Satin Bronze Tint (F**)


Satin Grey Tint (F**)


Clear (E**)


Bronze Tint Clear (E**)


Grey Tint Clear (E**)

WOOD GRAINS

Price group C

White Fineline

Lincoln Walnut

Grey Vicenza

Anthracite Fineline

PREMIUM WOOD GRAINS

Price group E

Natural Casella Oak

Marone Casella Oak

Natural Halifax Oak

DOOR DESIGNS

Combine your chosen finishes with a panel configuration. Availability varies by system.

Design on-line using our design tool here:
https://slidingwardrobeworld.com/made-measure-door-design-tool-s700/

Contact us for offline design & ordering

PLAIN

EQ2

EQ3

EQ4

C300 / C400

TB300 / TB400

EQ5

EQ6

UNEQ5

L300 / L400

VEQ2

VEQ3

V150L / V150R

Letters in brackets denote price groups. Finish illustrations are indicative; check physical samples for colour accuracy. Confirm design and material availability for your chosen GLISS system.